P43 SERIES T-BAR INSTALLATION INSTRUCTIONS

1 ⚠ **WARNING: GROUND FIXTURE IN ACCORDANCE WITH LOCAL AND NATIONAL CODES. FAILURE TO DO SO MAY RESULT IN SERIOUS PERSONAL INJURY.**

GENERAL NOTES

1- REMOVE REFLECTOR FOR ACCESS TO BALLAST WIRES AND KNOCK OUTS.

2- PLACE TROFFER CLAMP APPROX. 6" FROM HOUSING END (SEE FIGURE 1). USE 4 CLAMPS PER HOUSING. LIFT HOUSING ABOVE T-BAR GRID AND LOWER IT DOWN UNTIL TROFFER CLAMPS SNAP ONTO GRID (SEE FIGURE 2 & 3).

NOTE: ADDITIONAL SUPPORT TO STRUCTURAL MEMBER MAY BE REQUIRED. CHECK WITH LOCAL BUILDING CODES FOR REQUIREMENTS.

3- MAKE ALL WIRE CONNECTIONS AND REPLACE ALL REFLECTORS. INSTALL LAMP (FIG. 4) & SNAP ALL LENS, OR LOUVERS INTO HOUSINGS.

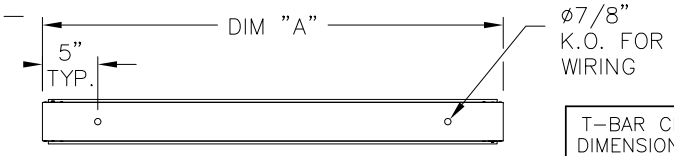

INDIVIDUAL MOUNTING

T-BAR CENTER DIMENSION "A"
24"
36"
48"
72"
96"

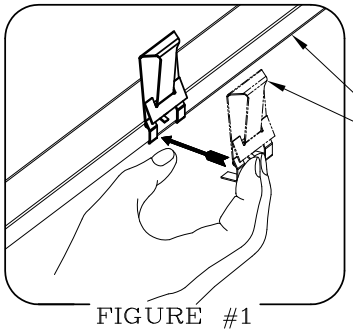

FIGURE #1

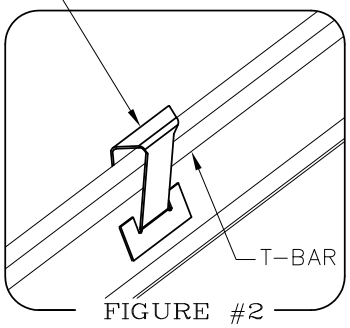

FIGURE #2

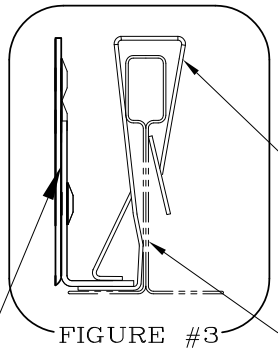

FIGURE #3

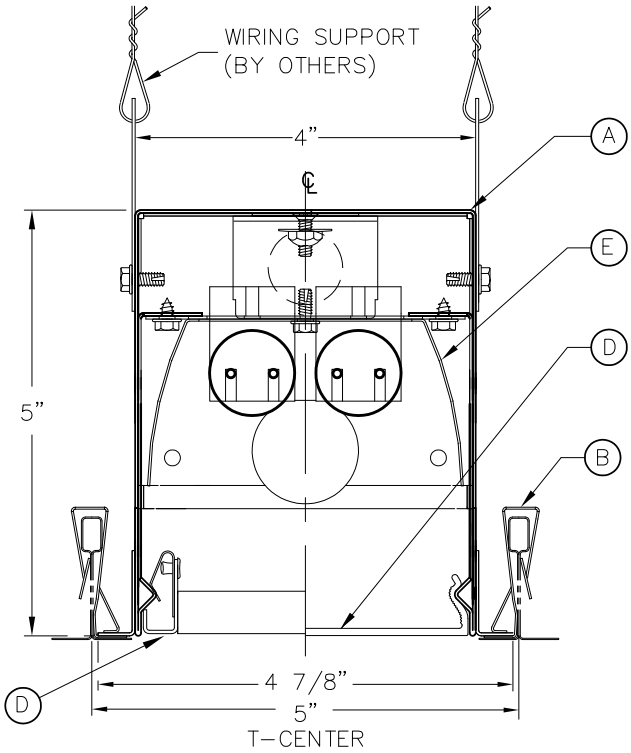

HOUSING CROSS SECTION

PICTORIAL VIEW

- (A) MODULAR HOUSING
- (B) TROFFER CLAMP
- (C) LENS
- (D) LOUVER
- (E) REFLECTOR

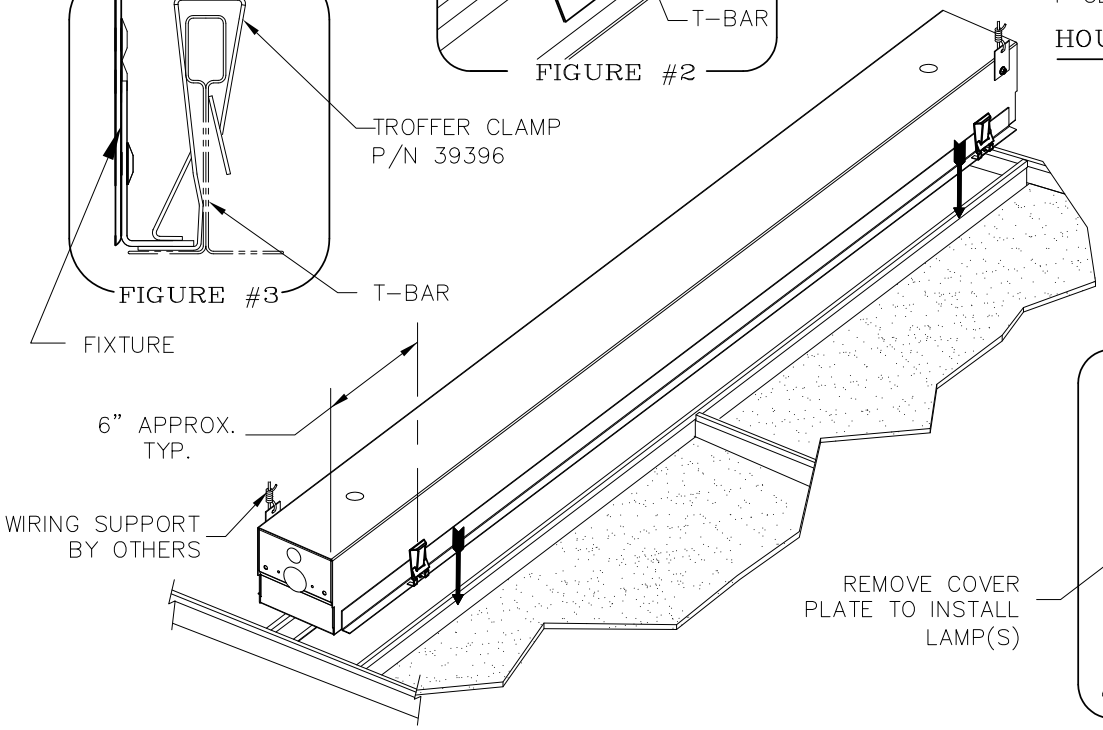

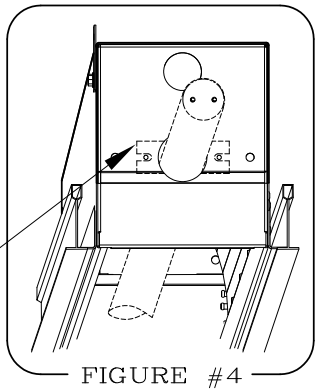

FIGURE #4

PRUDENTIAL LTG.
1774 EAST 21ST STREET L.A. CA 90058
WWW.PRULITE.COM
TEL. (213)746-0360 FAX (213)746-8838

DRAWN BY:	DATE	DWG. No.	DISK No.
G. ROMO	02/02/07	42158	VAULT
CHK.	DATE		REV. C

P43-X1 ASYMMETRIC LAMPING INSTRUCTIONS

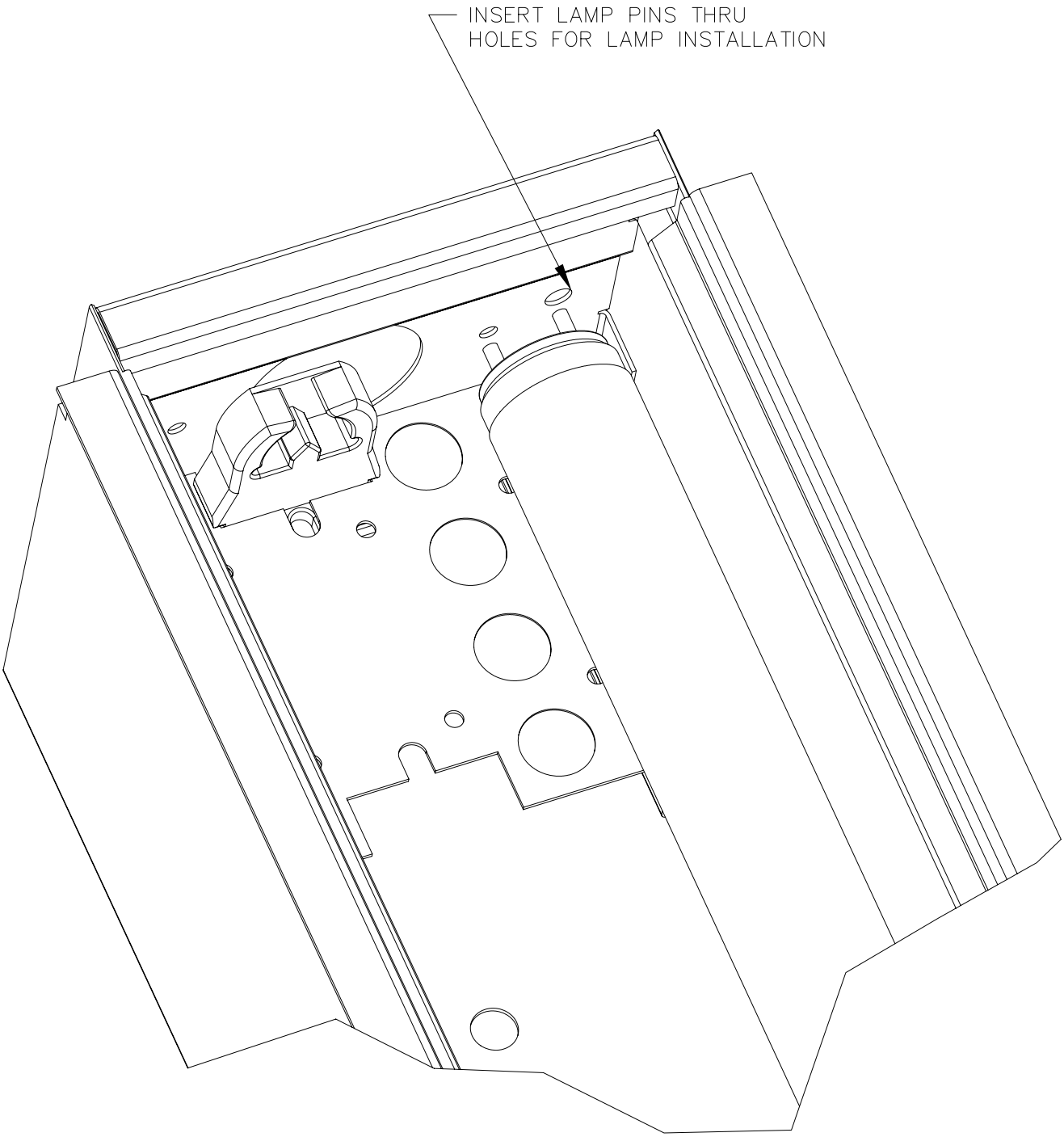

PRUDENTIAL LTG.
1774 EAST 21ST STREET L.A. CA 90058
WWW.PRULITE.COM
TEL. (213)746-0360 FAX (213)746-8838

DRAWN BY:	DATE	DWG. No.	DISK No.
G. ROMO	07/12/11	42158-ASY.	VAULT
CHK.	DATE		REV.